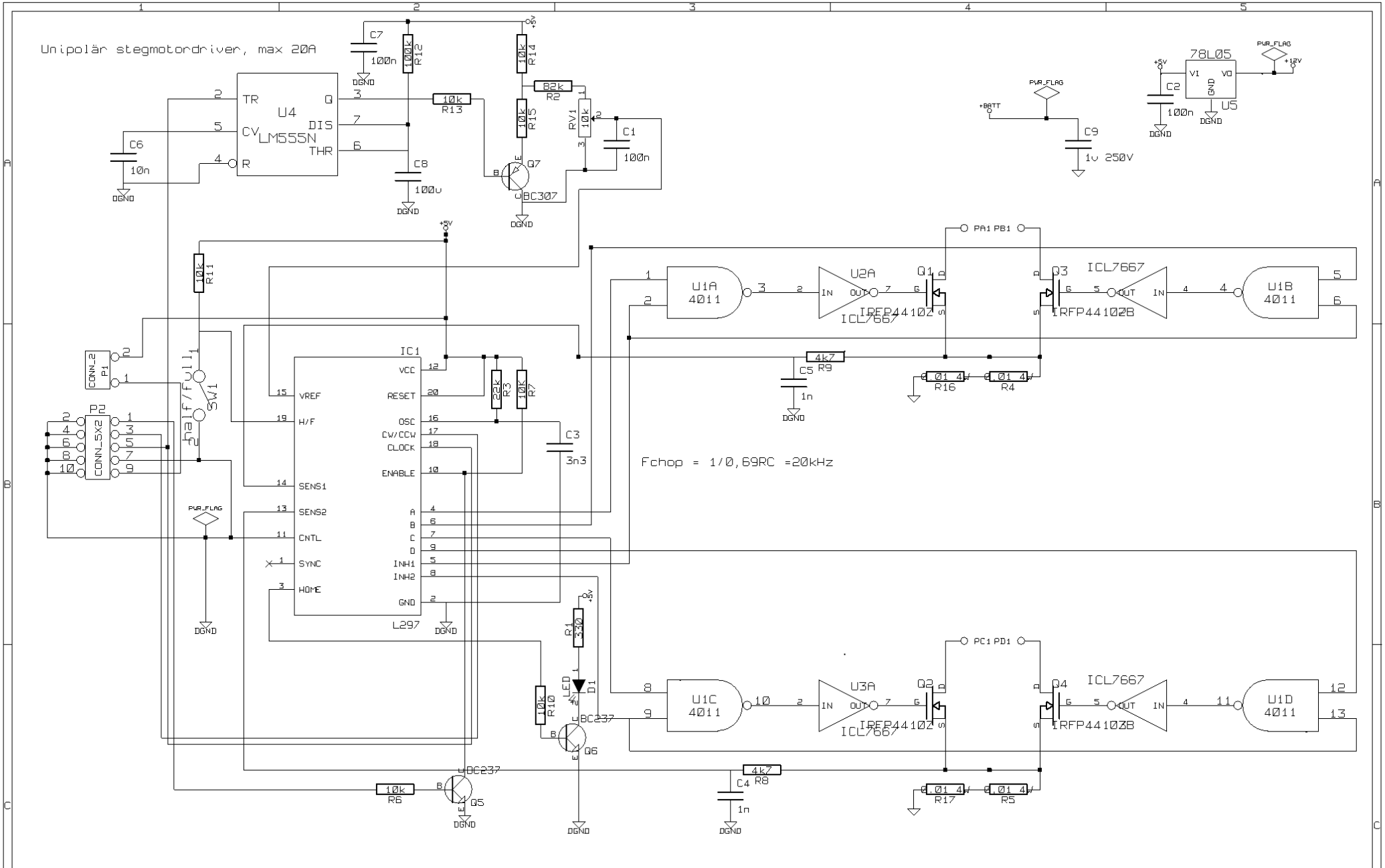

Pin 1 Enable (low = enabled), Pin 3, Direction, Pin 5 Step, Pin 7 Motor driver interface (common), Pin 9 +5VDC (selectable direction). All even pins are interface common.

File: Stepper2.sch		
Sheet: /		
Title: Noname.sch		
Size: A4	Date: 21 jun 2009	Rev:
KiCad E.D.A. EESchema (20080825c)		Id: 1/1